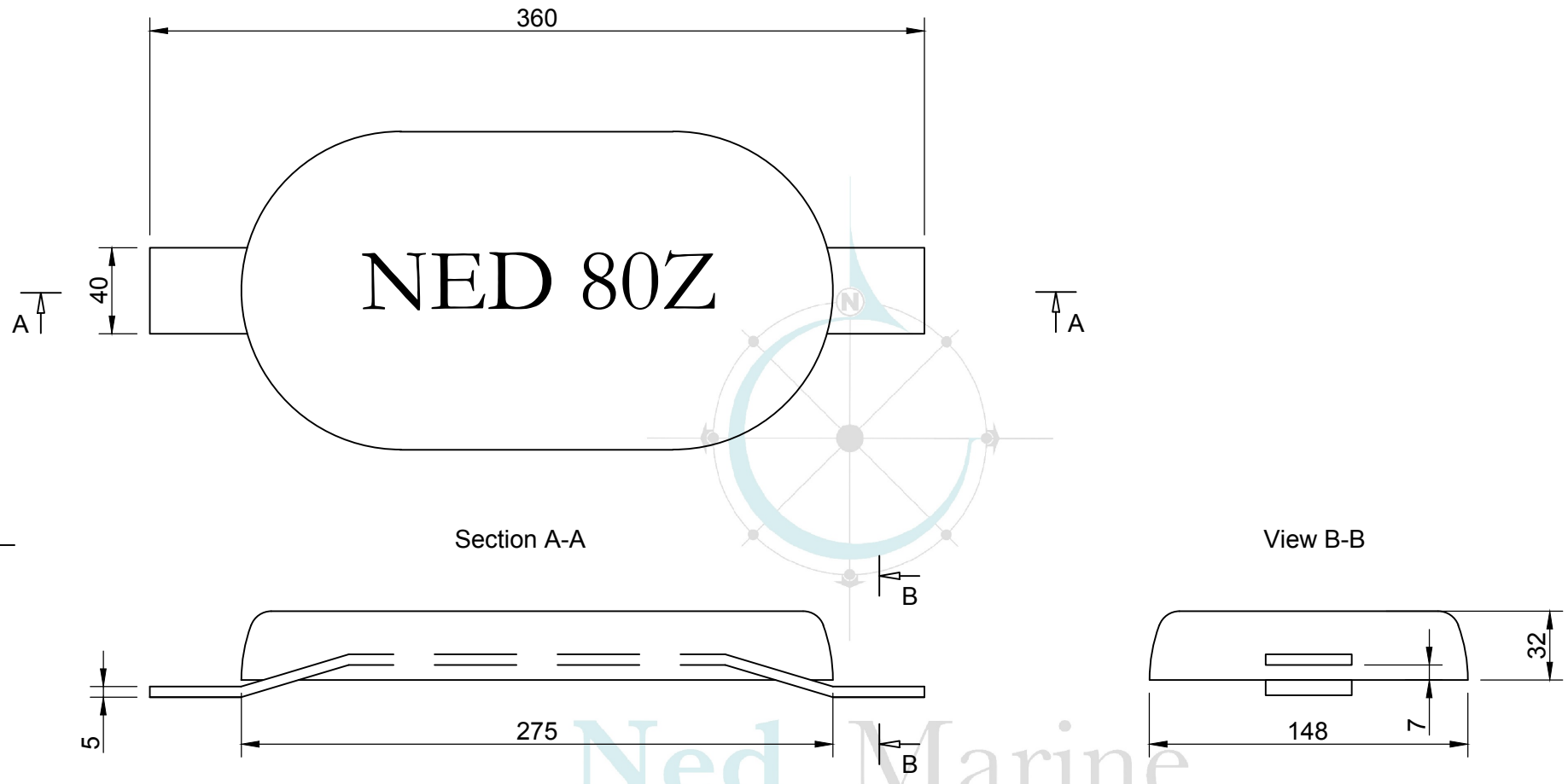

ZINC US-MIL-A-18001k ALLOY SPECIFICATION

Components:
Al 0,1-0,5% range
Fe 0,005% max
Pb 0,006% max
Cd 0,025-0,07% Max
Cu 0,005% max
Zn remaining

Capacity: 780 Ah/kg
Efficiency: 95%
Potential: - 1110 mV Cu -
$CuSO_4$ electrolyte artificial sea water DIN 50905
Insert quality: Plate, bar section EN10025 Grade S235/S275
Insert welding: All fabrication of steel inserts are according EN10287 and EN10288

NET WEIGHT: 7,3 kg
GROSS WEIGHT: 8,0 kg
INSERT WEIGHT: 0,7 kg

Company address:
Tinstraat 109
2984AN Ridderkerk
The Netherlands
Tel. +31 (0) 180 420 055
Fax. +31 (0) 180 499 810
E-mail. info@nedmarine.com
www.nedmarine.com

Ned Marine services B.V.

Drawing name: NED 80Z			
Drawing No.: 17.0194		Rev: 0	Sheet: 1/1
Drawn: A.M.	Approved: G.M.	Scale: -	Date: 09/06/2017

Ned T.D. 16 003

A4